

PHD-1019 - Chrome

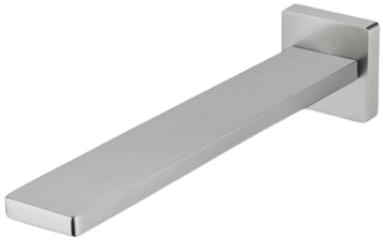

PHD-1019-BN - Brushed Nickel

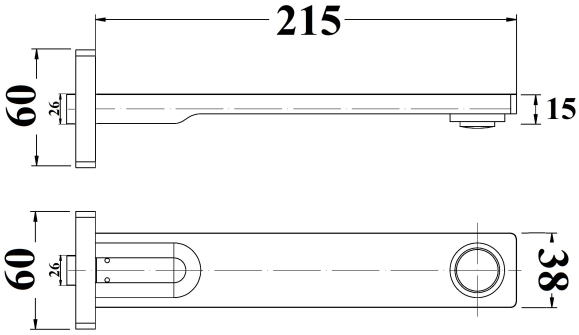

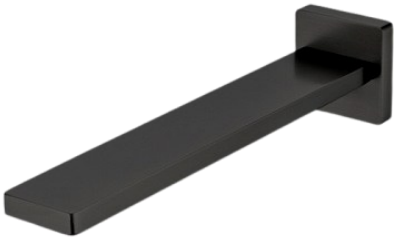

PHD-1019-MB - Matt Black

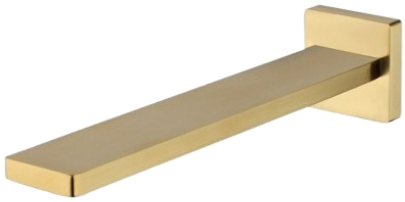

PHD-1019-BG - Brushed Gold



PHD-1019-GM - Gunmetal



RUKI Bath Wall Outlet

PHD-1019*

FINISH: See Above
Material: Brass
Size: 215mm

Maintenance and Care

- Do not use harsh detergents or products that contain chloride & halides.
- Do not use abrasive, cream or citrus based cleaners or hydro-chloric acid.
- Surface should be cleaned only with a mild detergent that must be rinsed off.
- It is suggested to only clean with warm water and a soft cloth.
- Damage caused by the wrong cleaning methods used will void warranty.

Warranty Coloured Finish:

2 Years Matt Black. **5 Years** other finishes replacement product & parts.

EMAIL: sales@arto.com.au www.arto.com.au **TEL: 07 3216 9666**