ARTO®

5 YEAR WARRANTY *Conditions Apply

TOILETS

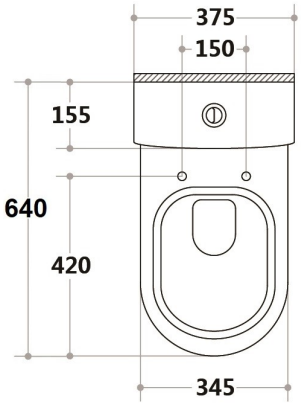

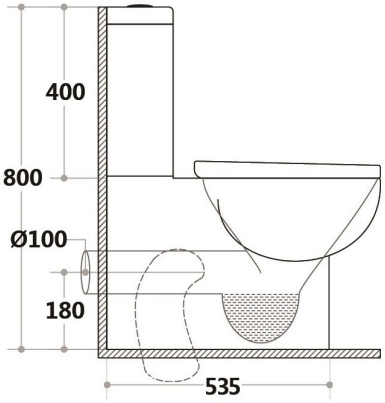

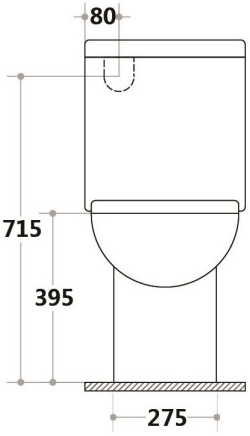

ARTO013 - Wall Face Toilet Suite

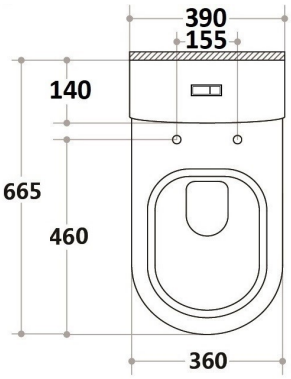

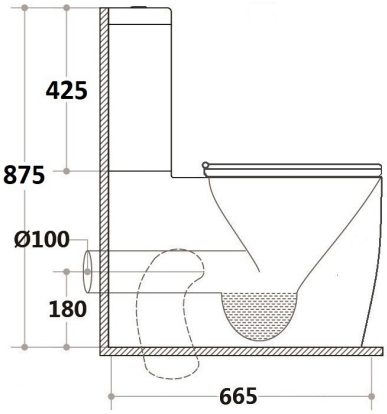

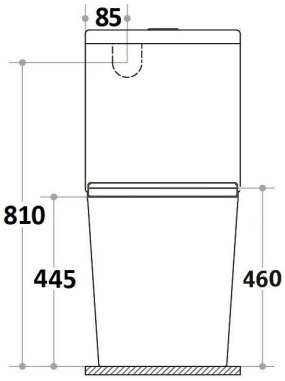

ARTO027 - Rimless Wall Face Toilet Suite